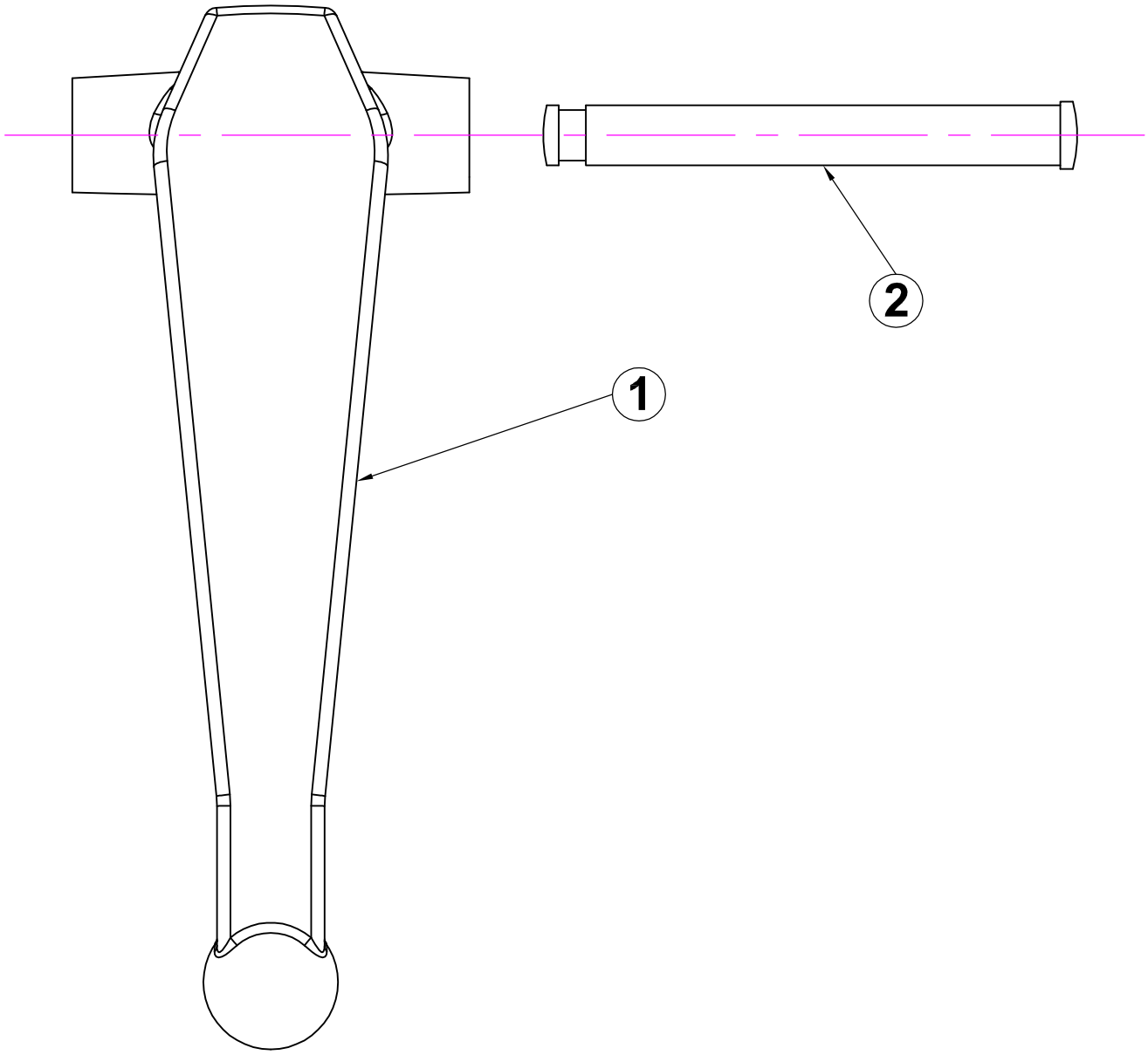

BILL OF MATERIAL

Item	Description	Part No.	R'q'd.	Material
2	GG10 Lever Pivot Pin	10-1466-130	1	Stainless Steel
1	GG10 Lever	10-1465-804	1	Aluminium - Anodised

Rev	Change Detail	Drw	Ckd	Date
Orig	Production Version	PGS	PT	17-03-11

Item	Part No.	Description	Material	Finish
	GG105	GG10 Lever Assembly	Refer to Assembly Drawings above	

GASGUARD

PROPRIETRY. This document and its contents may not be used or reproduced in any manner without the written authorisation of L.G.EQUIPMENT Pty Limited

GG10 Nozzle

Drawn Scale	1:1	A4

Lever Assembly

L.G.EQUIPMENT PTY.LTD.
SYDNEY. N.S.W. AUSTRALIA
ABN 70 003 275 250

Drawing No.	Revision
X1405	Orig