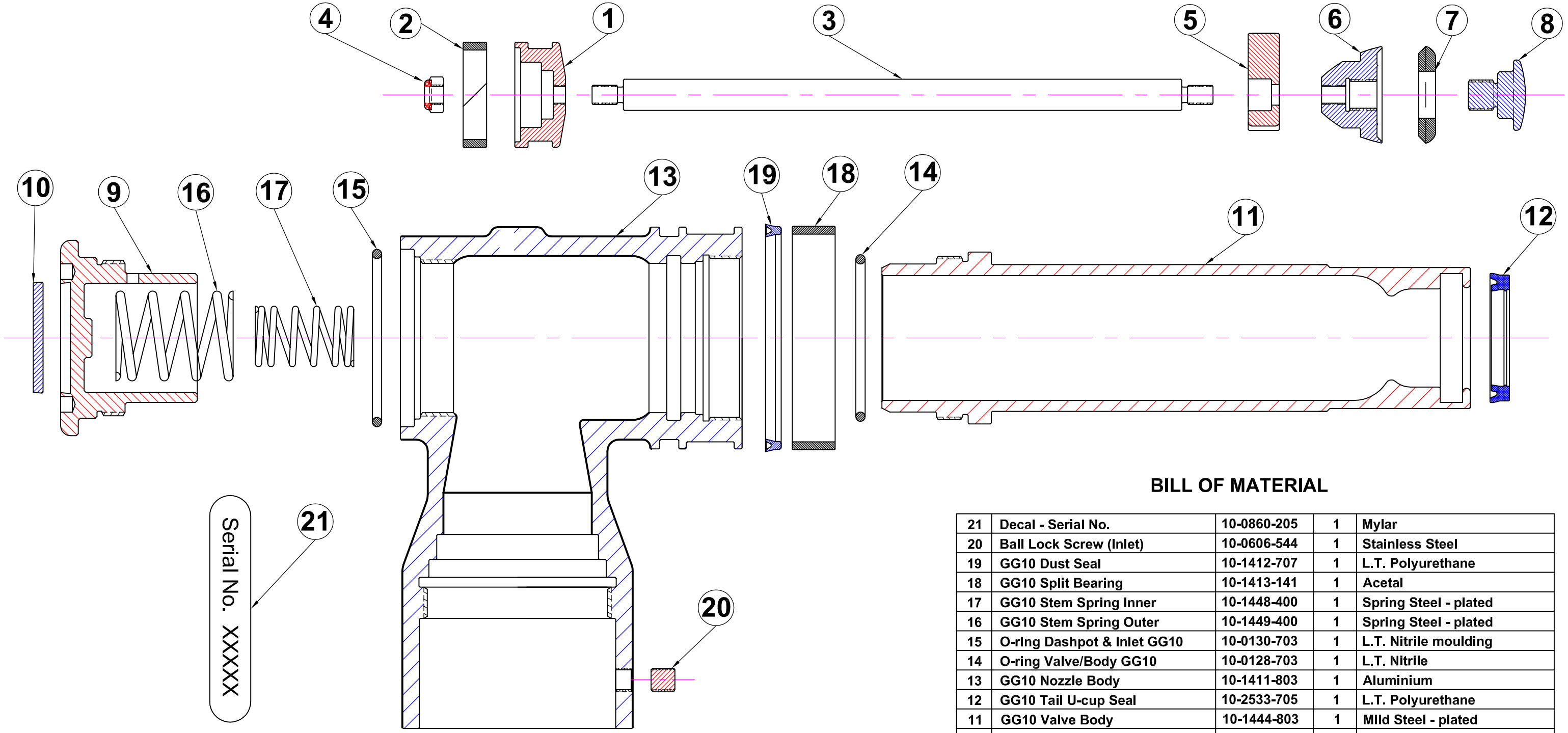

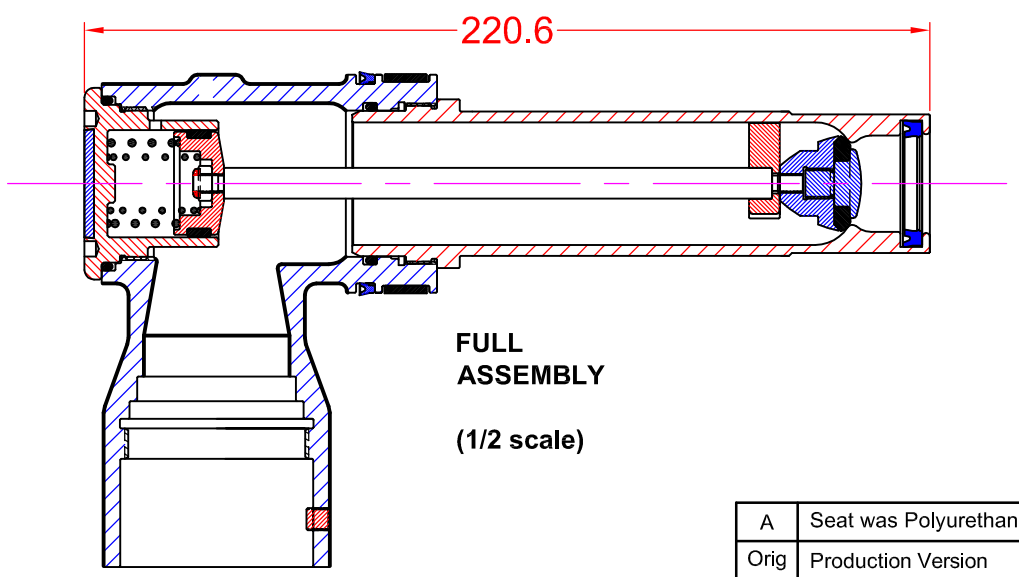

FULL ASSEMBLY

(1/2 scale)

BILL OF MATERIAL

Item	Description	Part No.	R'q'd.	Material
21	Decal - Serial No.	10-0860-205	1	Mylar
20	Ball Lock Screw (Inlet)	10-0606-544	1	Stainless Steel
19	GG10 Dust Seal	10-1412-707	1	L.T. Polyurethane
18	GG10 Split Bearing	10-1413-141	1	Acetal
17	GG10 Stem Spring Inner	10-1448-400	1	Spring Steel - plated
16	GG10 Stem Spring Outer	10-1449-400	1	Spring Steel - plated
15	O-ring Dashpot & Inlet GG10	10-0130-703	1	L.T. Nitrile moulding
14	O-ring Valve/Body GG10	10-0128-703	1	L.T. Nitrile
13	GG10 Nozzle Body	10-1411-803	1	Aluminium
12	GG10 Tail U-cup Seal	10-2533-705	1	L.T. Polyurethane
11	GG10 Valve Body	10-1444-803	1	Mild Steel - plated
10	GG10 Lever Pad	10-1417-141	1	Acetal
9	GG10 Dash Pot	10-1415-803	1	Mild Steel - plated
8	GG10 Valve Head	10-1441-130	1	Stainless Steel
7	GG10 Valve Seat	10-1442-711	1	Viton GLT
6	GG10 Valve Housing	10-1443-130	1	Stainless Steel
5	GG10 Valve stem guide	10-1447-141	1	Acetal
4	Nyloc Nut - M5	10-0005-511	1	St-Steel / Nylon
3	GG10 Valve stem	10-1445-803	1	Mild Steel - plated
2	Dash Pot Bearing	10-1452-141	1	Acetal
1	GG10 Dash Pot Piston	10-1446-804	1	Aluminium - anod

Rev	Change Detail	Drw	Ckd	Date
A	Seat was Polyurethane 95D 10-1442-707	PGS	PT	23-05-11
Orig	Production Version	PGS	PT	17-03-11

Part No.	Description	Material	Finish
GG104	GG10 Valve/Body assy	Refer to Refer to BOM / Material list	

GASGUARD

PROPRIETRY. This document and its contents may not be used or reproduced in any manner without the written authorisation of L.G.EQUIPMENT Pty Limited

GG10 Nozzle

Drawn Scale 1:1 A3

L.G.EQUIPMENT PTY.LTD.
SYDNEY. N.S.W. AUSTRALIA
ABN 70 003 275 250

GG10 Valve / Body Assem.

X1404 — Drawing No.

A — Revision